KAD42A

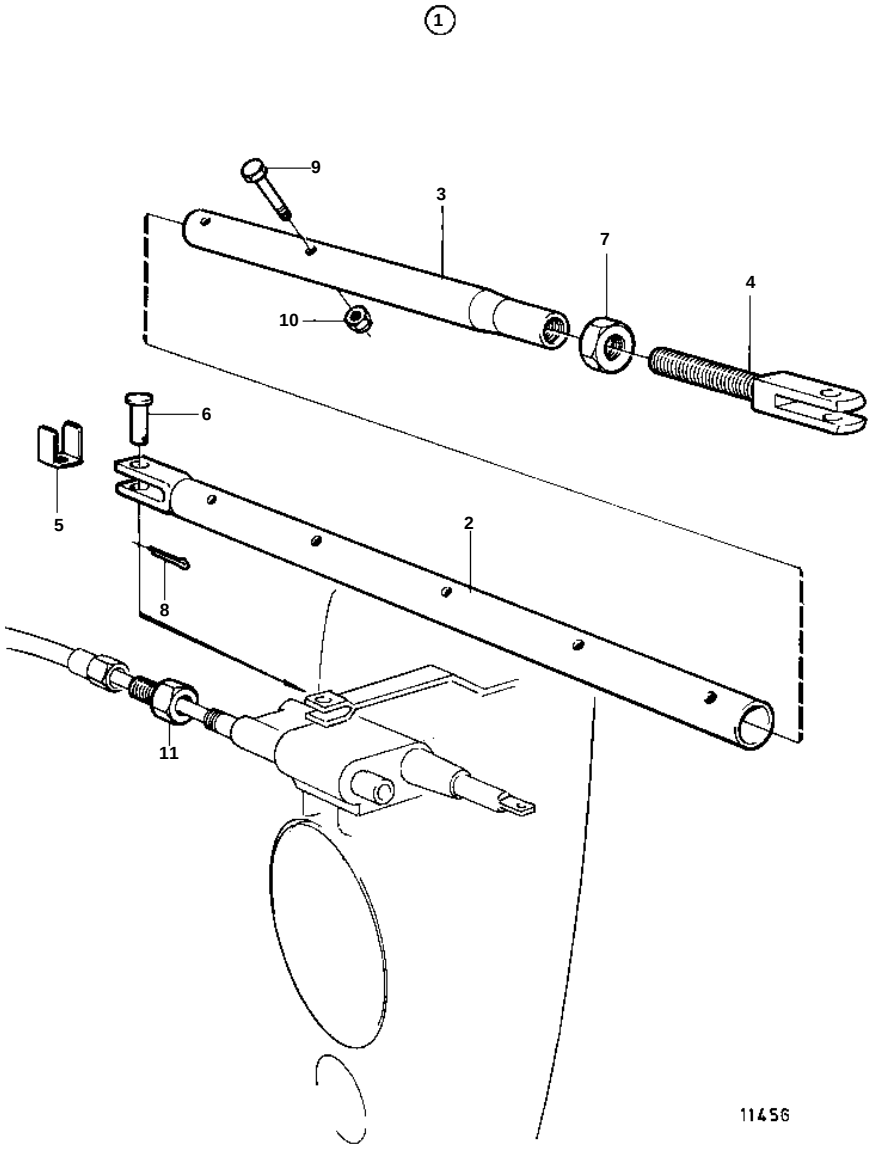

KAD42A

REF	PART NO.	QTY	DESCRIPTION		NOTES
1	1140610	1	Link rod kit		
2	828892	1	· Tube		
3	828893	1	· Tube		
4	828894	1	· Adjusting bar		
5	853160	2	· Lock washer		
6	913158	2	· Clevis pin		
7	955806	1	· Nut		
8	967707	2	· Cotter pin		
9	970951	2	· Screw		
10	971089	2	· Lock nut		
11	1140020	1	Impulse limiter		CAN BE USED TOGETHER KIT 1140610 WHEN POWER STEERING IS INSTALLED ON PREVIOUS TYPES OF DRIVES.